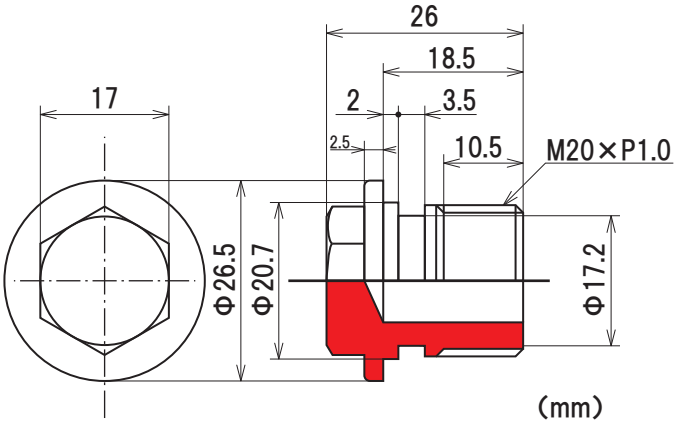
26
18.5
17
2
3.5
2.5
10.5
M20×P1.0
Φ26.5
Φ20.7
Φ17.2
(mm)