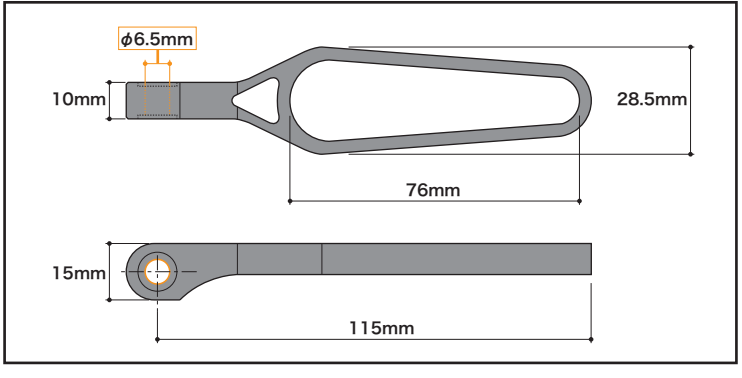
ϕ6.5mm
10mm
28.5mm
76mm
15mm
115mm